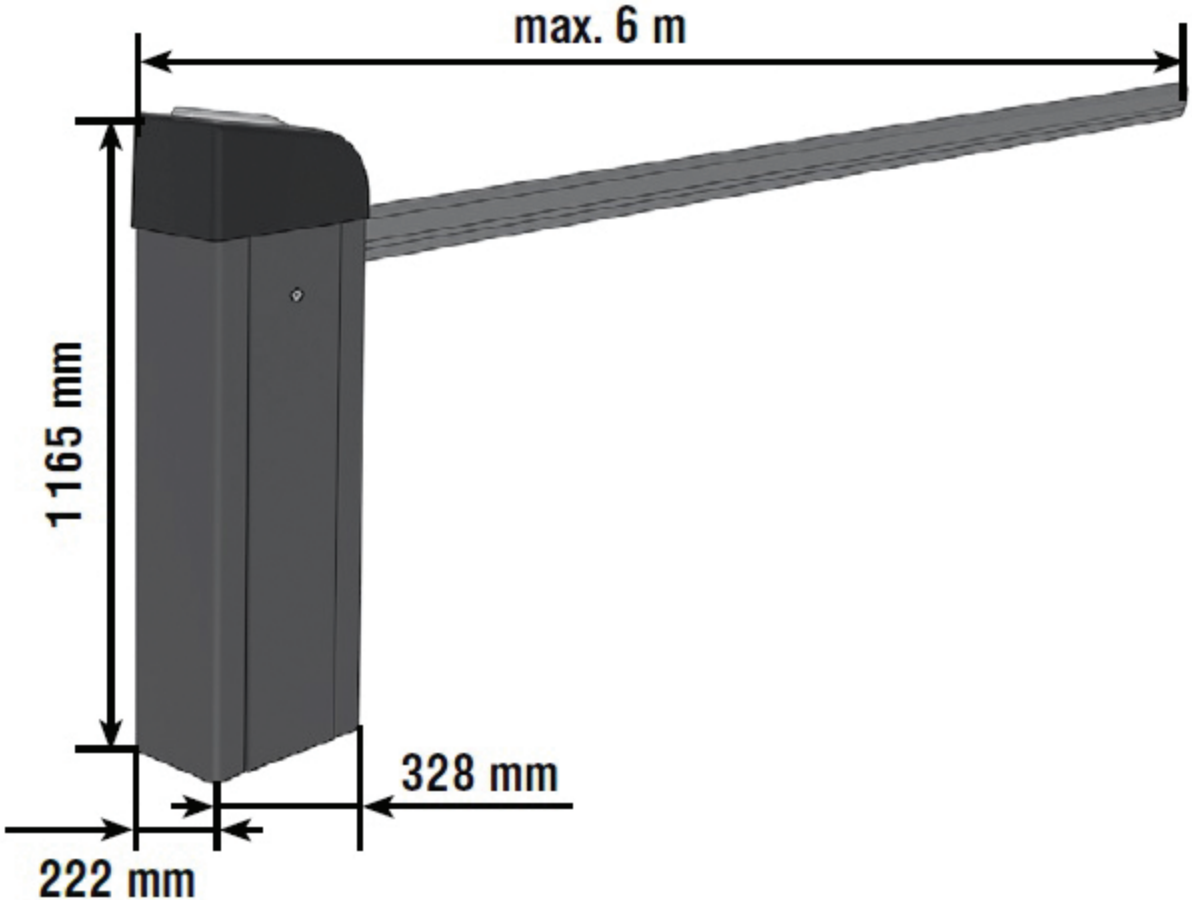
max. 6 m
1165 mm
328 mm
222 mm